# System B

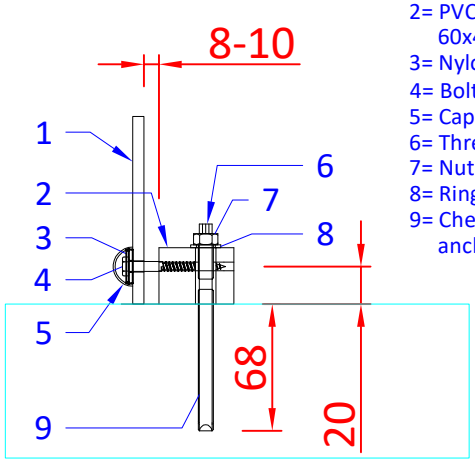


1= Product
2= PVC block 60x40x30 mm
3= Nylon ring
4= Bolt Ø6x50 mm
5= Cap
6= Threaded rod M8
7= Nut M8
8= Ring M8
9= Chemical anchor M8

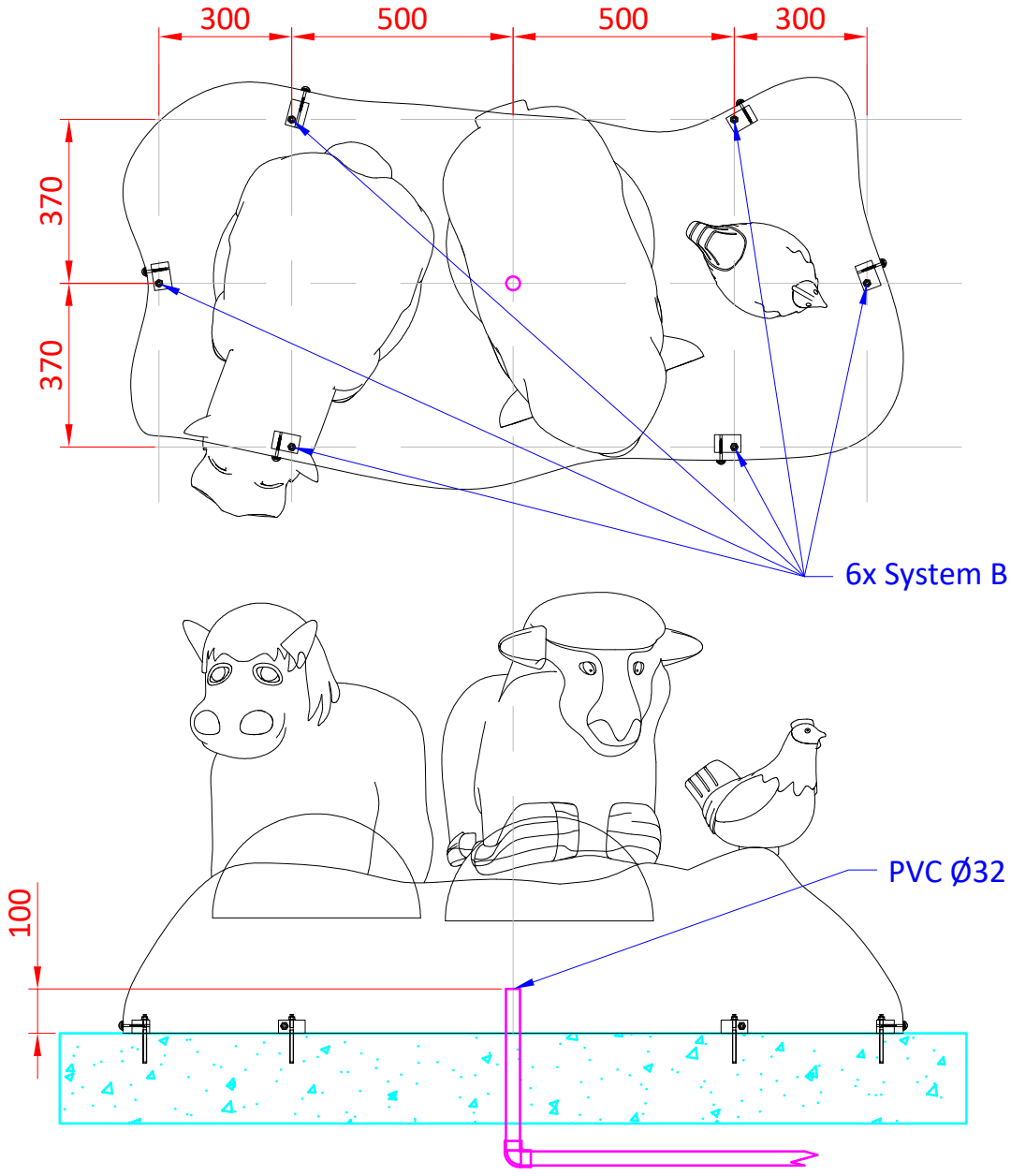


Aqua Drolics
Sportlaan 9, 5683 CS Best, The Netherlands
**T** +31 (0)499 393 540 | **F** +31 (0)499 393 744
**E** info@aquadrolics.nl | www.aquadrolics.nl

| | | | |
|---|---|---|---|
| PROJECT NAME: Mounting | | SCALE: 1:16 | DIMENSION: mm |
| | | FORMAT: A4 | DRAWN BY: KH |
| DRAWING NR: 2.3.1 | | DATE: 3-5-2017 | |
| PRODUCT: 1130 9716 Farm island | | PROJECTION: | |

AQUA DROLICS
Mounting system B

Tools:

- drilling machine
- drill (steel) Ø 5 mm
- drill (concrete) Ø 10 mm
- steel brush Ø 11 mm
- pencil
- tape-measure
- wrench nr 10
- wrench nr 13

1

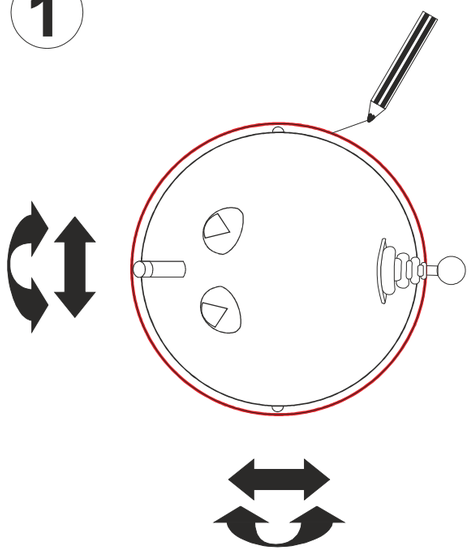

Determine the position of the product, than draw the contour with a pencil.

2

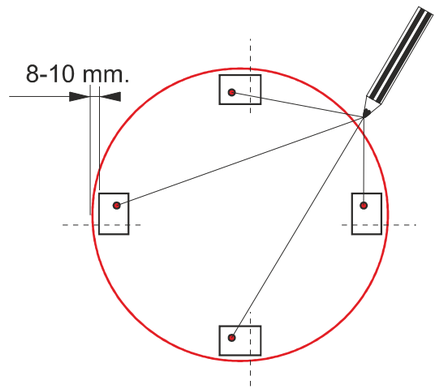


Position the PVC blocks at a distance of 8-10 mm from the edge of the product (as shown in drawing 2.3.1)

3

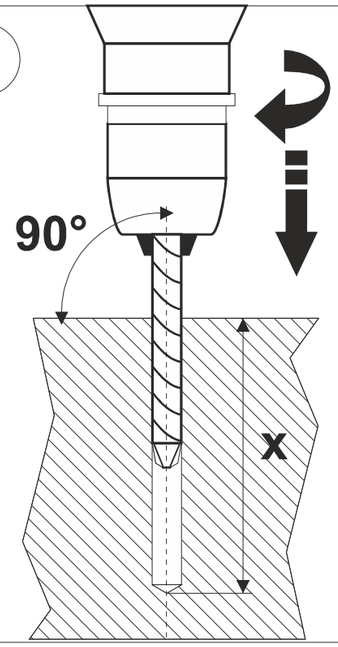


Drill holes Ø 10 in the sub-soil.
Drilling depth is shown in the attached drawing.

4

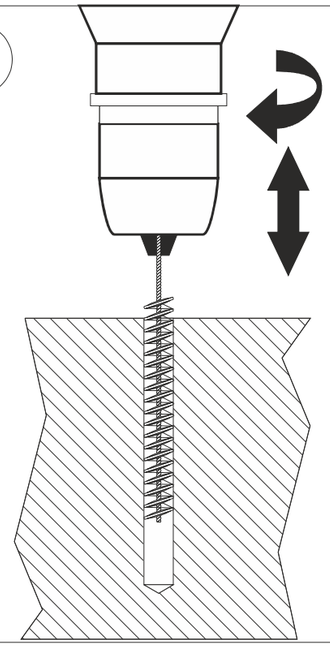

Brush the holes with the steel brush (Ø 11 mm).
Remove any dust.

5

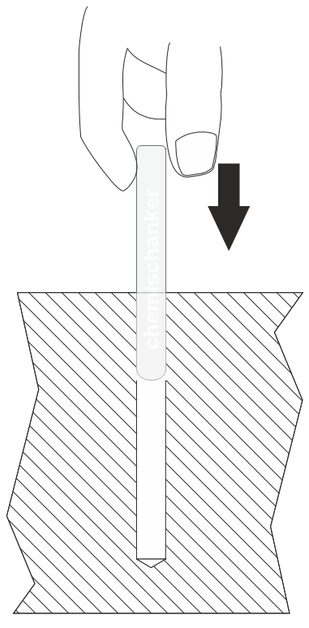

Insert capsule.

6

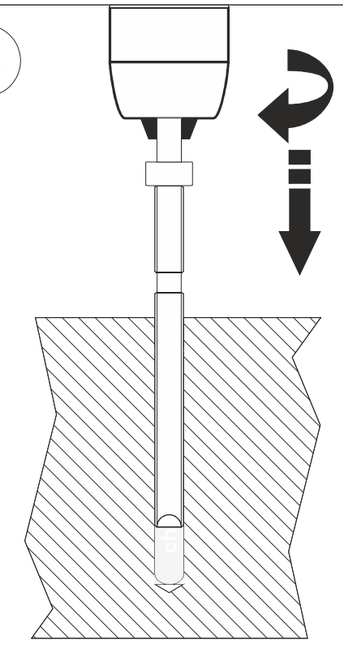

Insert anchor shaft, using the delivered tool.

| | T = 10°C | T = 20°C |
|---|---|---|
| harden time dry concrete | 40 min. | 20 min. |
| harden time wet concrete | 120 min. | 60 min. |

7

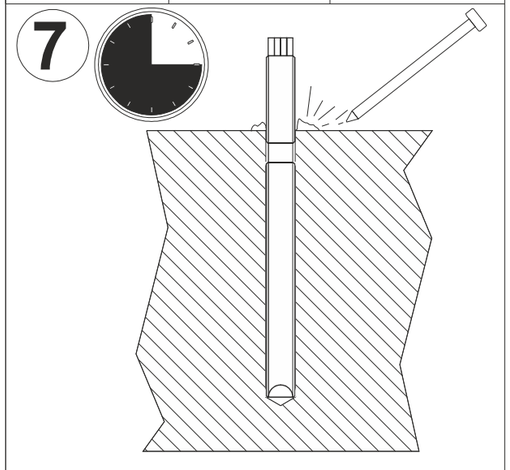

Leave the anchor to harden. Afterwards, remove any remains around the shaft.

8

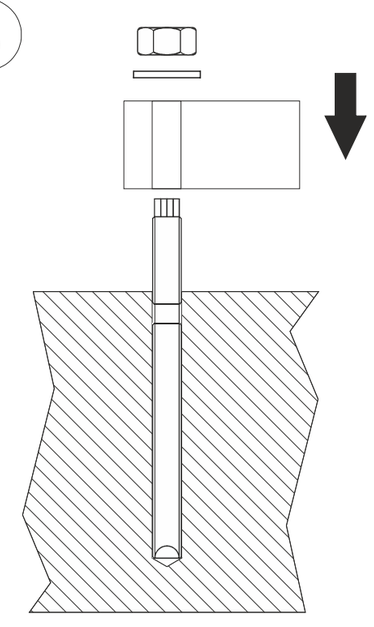

Mount the PVC blocks with ring and nut. Mark their location outside the outline of the product.

9

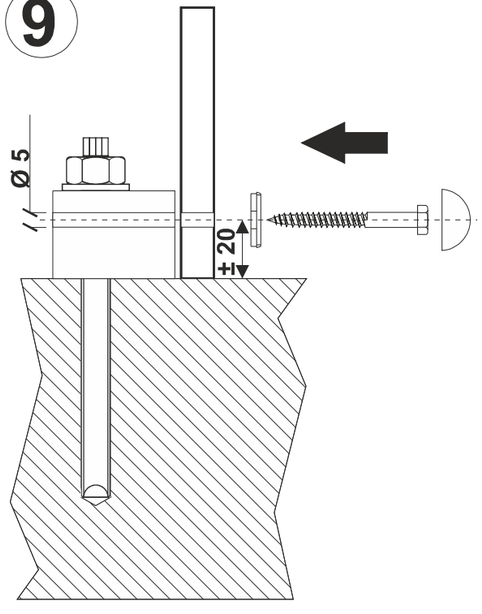


Place the product over the blocks. Drill a hole Ø 5 mm through the product in each of the PVC blocks. Fix the product on the blocks with the bolts Ø 6x50 mm. Put a nylon cap on every bolt.